MHS-C

Features

- Disk type flexible coupling.
- Compact design with short overall length.
- Stainless steel disks absorb angular and shaft end-play misalignments, but do not absorb parallel misalignment.
- Suitable to small servo system exact transmission.
- Low moment of inertia backlash-free.
- Finished products featuring two different end bore diameters available in stock.
- Clamp type.
- MHS-C Body : Extra Super Duralumin.

特　性

- 簧片型撓性聯軸器
- 長度短．體積小巧。
- 單組不銹鋼簧片可容許偏角和軸向偏差；但不容許偏心。
- 適於中小型伺服馬達精密定位傳動。
- 低慣性、無背隙。
- 兩端不同孔徑的產品標準化。
- 夾鉗螺絲型固定。
- MHS-C 本體：鋁合金材質。

Clamp type

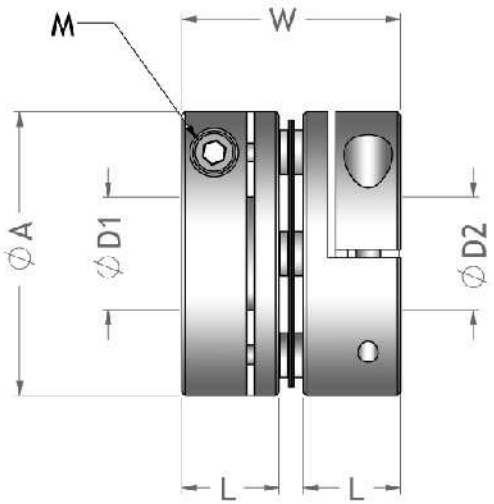

MHS-27C-35C

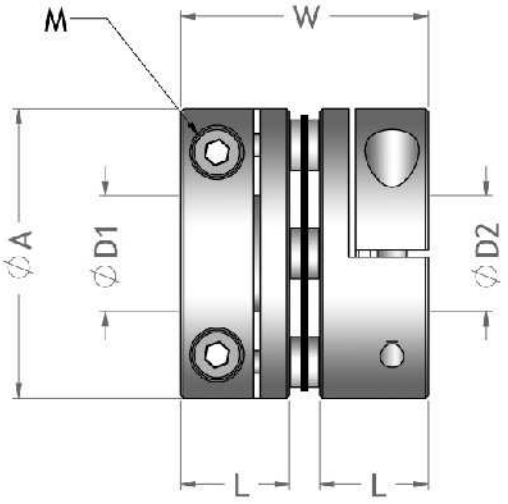

MHS-40C-95C

Specifications

unit : mm

Product No 產品名稱	Rated Torque 常用扭矩 (N.m)	Max. Torque 最大扭矩 (N.m)	Max. Rotational Frequency. 最高迴轉數 (min^{-1})	Moment* Of Inertia 慣性 ($kg.m^2$)	Error of Angularity 容許角偏差 (°)	Error of Shaft End-play 容許軸向偏差 (mm)	Mass** 質量 (g)
MHS-27C	1.8	3.6	10000	$3.1x10^{-6}$	1°	±0.15	30.0
MHS-35C	4.0	8.0	10000	$8.0x10^{-6}$	1°	±0.2	54.0
MHS-40C	7.0	14.0	10000	$2.0x10^{-5}$	1°	±0.25	94.0
MHS-45C	10.0	20.0	10000	$2.8x10^{-5}$	1°	±0.3	112.0
MHS-50C	16.0	32.0	10000	$6.6x10^{-5}$	1°	±0.35	189.0
MHS-57C	26.0	52.0	10000	$9.8x10^{-5}$	1°	±0.4	242.0
MHS-68C	62.0	124.0	10000	$24.0x10^{-5}$	1°	±0.45	408.0
MHS-82C	100.0	200.0	10000	$6.8x10^{-4}$	1°	±0.6	791.0
MHS-95C	180.0	360.0	10000	$10.8x10^{-4}$	1°	±0.65	1024.0

> Ma x. Bore Moment of Inertia / 最大孔徑時慣性矩
> Max. Bore Mass / 最大孔徑時質量

Dimension

unit : mm

Product No 產品名稱	A	L	W	Stock Bores 標準孔徑 D1xD2(公差 H8)		M
				Min D1	Max D2	
MHS-27C	27	11	24.5	5	10	2-M3
MHS-35C	35	12	27	6	14	2-M3
MHS-40C	40	15	34	8	16	4-M4
MHS-45C	45	15	34	10	20	4-M4
MHS-50C	50	20	45	12	22	4-M5
MHS-57C	57	20	45	12	25	4-M5
MHS-68C	68	24	54	14	32	4-M6
MHS-82C	82	30	68	19	35	4-M8
MHS-95C	95	30	68	22	45	4-M8

When Ordering

請依照型錄所制訂的產品規格訂購，兩側孔徑可依客戶需在規範內加工製作。
When placing an order, make sure to include product no.
And stock bores (both sides) of product.

MHS - 50C - ø12 x ø20

Product No D1 x D2